| REV | ECN No. | DATE | REMARK |
|---|---|---|---|
| A0 | NEW | 2018.03.06 | NEW RELEASE |

RoHS Compliant Pb

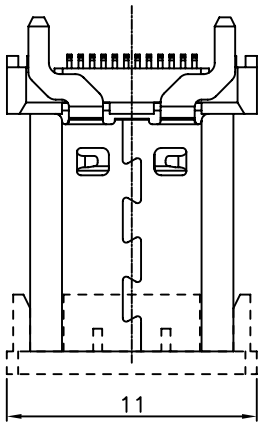


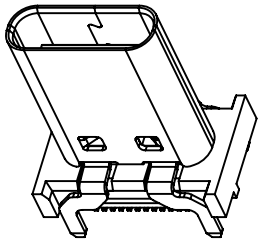

WITHOUT COVER

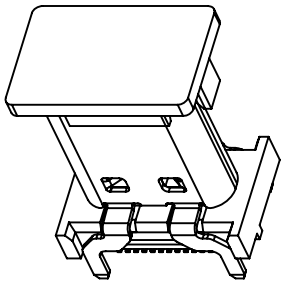

WITH COVER

NOTE:

1.CURRENT RATING: 3.0A MAX
2.Contact Resistance:40mOHM Max.;
3.TEMPERATURE RANGE: -30 °C ~ 85 °C
4.Dielectric Withstanding Voltage:100V AC For 1 Minute;
5.Insulation Resistance:100M OHM Min.;
6.Mating And Unmating Force:
Mating Force: 5~20N
Unmating Force: 8~20N(0~1000cycle);
6~20N(1001~10000cycle);
7.Durability:10000 Cycles;

8. PART NUMBER CODE:

C F 101 - 24 L X XX R - 91
① ②

① HOUSING: B:BLACK
② CONTACTS PLATED: 01:半金锡1u"

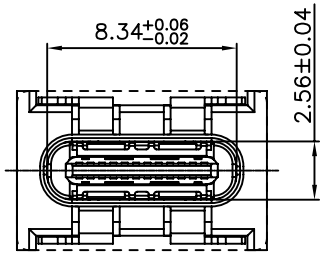


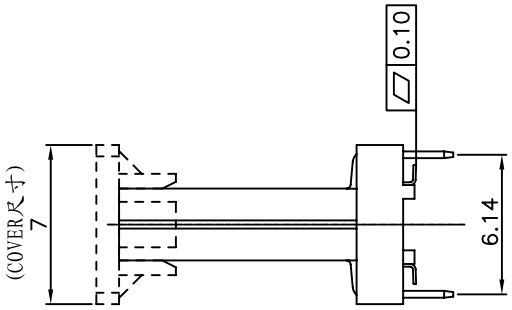


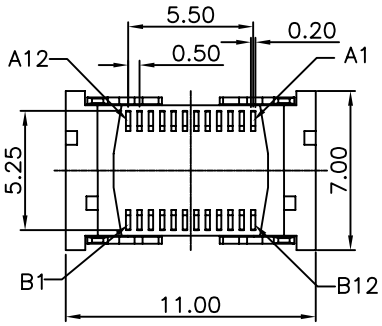


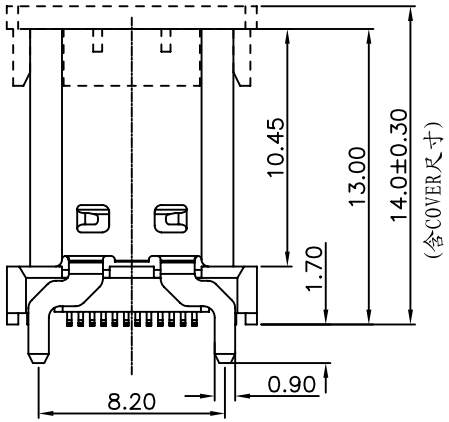


| Item | Title | Material | Dispose | Remark |
|---|---|---|---|---|
| 1 | Shell | SUS 304 | Ni:30u" Min. | |
| 2 | GND Plate | SUS 301 | | |
| 3 | Mid Plate | SUS 304 | Solder Tails: Matt Tin | |
| 4 | Top Contact | C7025 | Mating Area: See P/N | |
| 5 | Bottom Contact | C7025 | Solder Tails: Matt Tin | |
| 6 | Insulator | LCP | UL 94V-0 | Black |

MATERIAL NO.:

PART NUMBER CODE

REVIEW TABLE FOR DETAILS

| QUALITY SYMBOL | GENERAL TOLERANCES (UNLESS SPECIFIED) | |
|---|---|---|
| ▽ 0 | x.xxxx | ± --- |
| ▽▽ 0 | x.xxx | ± 0.10 |
| ▽▽▽ | x.xx | ± 0.25 |
| | x.x | ± 0.30 |
| | ANGULAR | ± --° |

THIS DRAWING CONTAINS INFORMATION THAT IS PROPRIETARY TO ZDT TECHNOLOGY. AND SHOULD NOT BE USED WITHOUT WRITTEN PERMISSION

ZDT 深圳市中科兴达科技有限公司 SHENZHEN ZDT TECHNOLOGY CO., LTD

TITLE: USB 3.1 TYPE C FEMALE VERTICAL H13.0mm SMT TYPE

| DRAWN BY | DATE |
|---|---|
| SAM | 2018.03.06 |
| CHECKED BY | DATE |
| JAY | 2018.03.06 |
| APPROVED BY | DATE |
| JACKY | 2018.03.06 |

DOCUMENT NO.: CF101-24-91

SHEET NO.: 1 OF 3

DIMENSION STYLE: MM ONLY

DESIGN UNITS: METRIC

SCALE: 5:1

THIRD ANGLE PROJECTION

frame size: A4

| REV | ECN No. | DATE | REMARK |
|---|---|---|---|
| A0 | NEW | 2018.03.06 | NEW RELEASE |

RoHS Compliant Pb

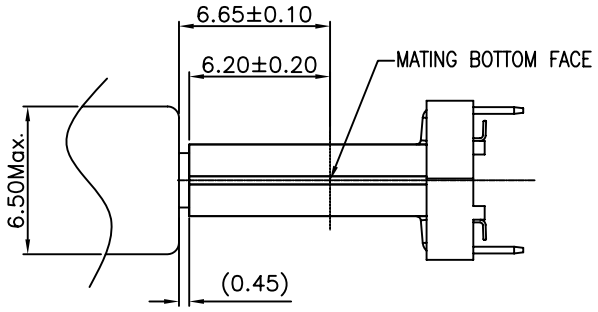


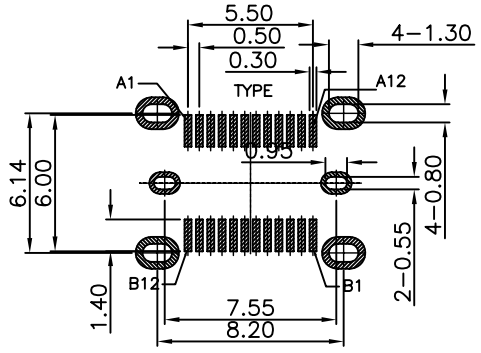


RECOMMEND P.C.B LAYOUT(COMPONENT SIDE)

TOLERANCE FOR PCB LAYOUT IS ± 0.05

KEEP OUT AREA

*USB TYPE-C PIN ASSIGNMENTS*

| PIN NUMBER | SIGNAL NAME | PIN NUMBER | SIGNAL NAME |
|---|---|---|---|
| A1 | GND | B12 | GND |
| A2 | SSTXp1 | B11 | SSRXp1 |
| A3 | SSTXn1 | B10 | SSRXn1 |
| A4 | VBUS | B9 | VBUS |
| A5 | CC1 | B8 | SBU2 |
| A6 | Dp1 | B7 | Dn2 |
| A7 | Dn1 | B6 | Dp2 |
| A8 | SBU1 | B5 | CC2 |
| A9 | VBUS | B4 | VBUS |
| A10 | SSRXn2 | B3 | SSTXn2 |
| A11 | SSRXp2 | B2 | SSTXp2 |
| A12 | GND | B1 | GND |

MATERIAL NO.:

PART NUMBER CODE

REVIEW TABLE FOR DETAILS

| QUALITY SYMBOL | GENERAL TOLERANCES (UNLESS SPECIFIED) | |
|---|---|---|
| ≥ 0 | x.xxxx | ± --- |
| ≥ 0 | x.xxx | ± 0.10 |
| | x.xx | ± 0.25 |
| = | x.x | ± 0.30 |
| ▶ | ANGULAR | ± --° |

THIS DRAWING CONTAINS INFORMATION THAT IS PROPRIETARY TO ZDT TECHNOLOGY. AND SHOULD NOT BE USED WITHOUT WRITTEN PERMISSION

ZDT 深圳市中科兴达科技有限公司 SHENZHEN ZDT TECHNOLOGY CO., LTD

TITLE: USB 3.1 TYPE C FEMALE VERTICAL H13.0mm SMT TYPE

DOCUMENT NO.: CF101-24-91

SHEET NO.: 2 OF 3

| | | |
|---|---|---|
| DRAWN BY | SAM | DATE 2018.03.06 |
| CHECKED BY | JAY | DATE 2018.03.06 |
| APPROVED BY | JACKY | DATE 2018.03.06 |

DIMENSION STYLE: MM ONLY | DESIGN UNITS: METRIC | SCALE: 5:1 | THIRD ANGLE PROJECTION

frame size: A4

| REV | ECN No. | DATE | REMARK |
|---|---|---|---|
| A0 | NEW | 2018.03.06 | NEW RELEASE |

RoHS Compliant Pb

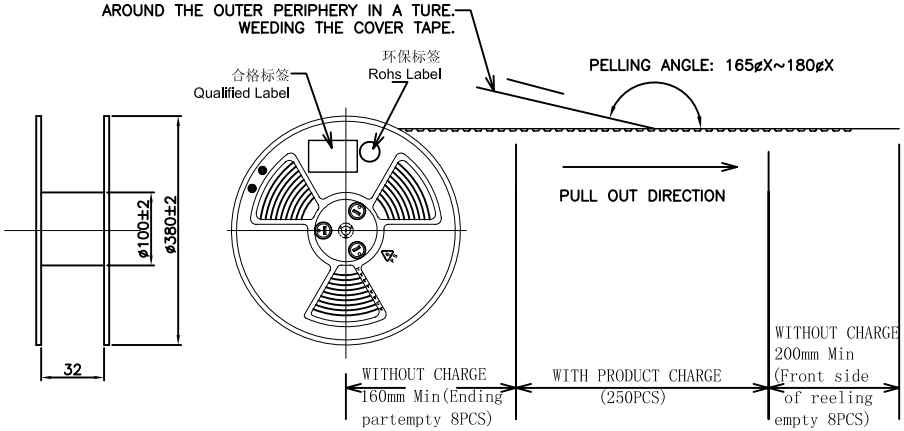


## 包装规范说明:

1. 如图所示首先CARRIER TAPE（载带）需先预留8PCS空格后方可置入成品,并附COVER TPAE(上带)覆盖于上,再配合带装机自动卷绕于REEL(塑胶卷轴)收料.
As shown from picture, the initial starting carrier need to be emptied for 8 pcs, then put connector on Inth carrier; Then cover it with Cover Tape, and Reeling it with Reel auto machine.
2. 在定量包装完成后,前端CARRIER TAPE亦需预留8PCS空格,而COVER TPAE配合CARRIER TYPE长度覆盖后,并须再超出200mm以上,最后以唛拉贴固,并于REEL盘上方贴合格标签和ROHS标签各一张.
In the end of the Reel, need to empty 8 pcs carrier tape; After covering the carrier, then the Cover Tape need to be 200mm longer, and use tape to fix the cover tape to the reel. Put "RoHS label" and "Qualified Label" on the tape.
3. 注意:COVER TAPE不可浮起或有贴附不顺,歪斜及成品放置方向错误之现象.
Attention: no deformation of Cover Tape is allowed (protruded plastic, or not smooth, bednt or product is wrong positioned)
4. 在纸箱内左右,前后侧各放入一块三角卡板,每个PE袋中装入8个REEL盘,并在PE袋中放入2PCS干燥剂,用胶带封好.在每个纸箱内装入10PCS卷盘,共1叠.盖上箱盖后以胶带封箱,于侧位置贴出货标签和RoHS标签各一张.
Inside of carton, at left and right side, put triangle fixed card; Put10Reels to PE bag, and put l bags of desiccant inside the PE bag. Each carton has 8 reels. Put "RoHS label" and "Delivery label" on side of the carton.
5. 零箱部分，出货时须用缓冲物填满.
The fractional box must be filled by cushion before shipment.

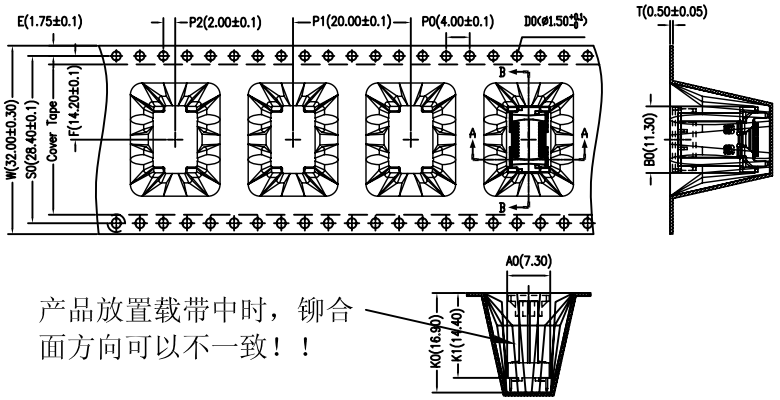


产品放置载带中时，铆合面方向可以不一致！！

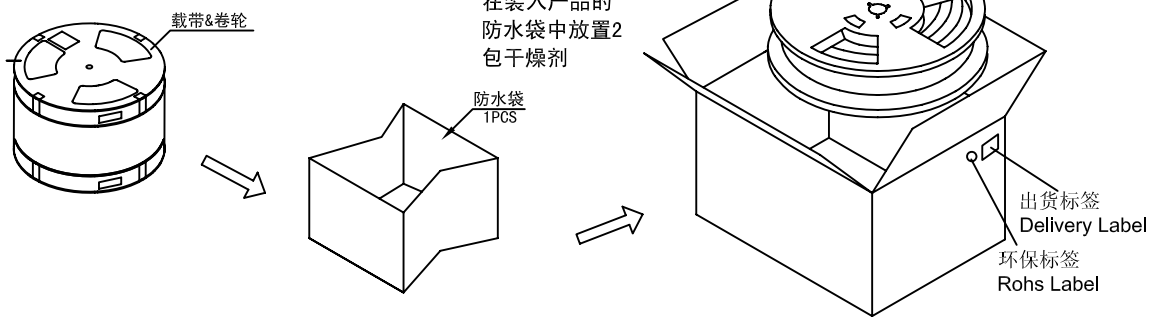


| NO. | 包材名称 Items | 包材料号 Item no | 用量 Usage | 适用类别 Series | 备 注 / Remark |
|---|---|---|---|---|---|
| ① | 纸箱 Carton | PE061 | 1 | 广东省外,K=K | 400*400*310mm |
| ② | PE Bag | P120090-01 | 1 | | 800*700*0.05mm |
| ③ | carrier tape | PB265 | 8 | | W=32mm PET 透明L=5.32M |
| ④ | cover tape | P120251-01 | / | | W=25.5MM,300m/r透明色 |
| ⑤ | 塑胶卷轴 Plastic Reel | PB021 | 8 | | Ø380mm,W=37mm |
| ⑥ | 干燥剂 Desiccant | | 4 | | ——— |
| ⑦ | 环保标签 Rohs Label | | 9 | | |
| ⑧ | 合格标签 Qualified Label | | 8 | | 80*35mm |
| ⑨ | 出货标签 Dellvery Label | | 1 | | 80*50mm |

MATERIAL NO.:

PART NUMBER CODE

REVIEW TABLE FOR DETAILS

QUALITY SYMBOL ▽ ▽▽ ▽▽▽

| GENERAL TOLERANCES (UNLESS SPECIFIED) | |
|---|---|
| X.XXXX | ± --- |
| X.XXX | ± 0.10 |
| X.XX | ± 0.25 |
| X.X | ± 0.30 |
| ANGULAR | ± --° |

THIS DRAWING CONTAINS INFORMATION THAT IS PROPRIETARY TO ZDT TECHNOLOGY. AND SHOULD NOT BE USED WITHOUT WRITTEN PERMISSION

深圳市中科兴达科技有限公司
SHENZHEN ZDT TECHNOLOGY CO., LTD

TITLE: USB 3.1 TYPE C FEMALE VERTICAL H13.0mm SMT TYPE

DOCUMENT NO.: CF101-24-91

SHEET NO.: 3 OF 3

| DRAWN BY | DATE |
|---|---|
| SAM | 2018.03.06 |
| CHECKED BY | DATE |
| JAY | 2018.03.06 |
| APPROVED BY | DATE |
| JACKY | 2018.03.06 |

DIMENSION STYLE: MM ONLY | DESIGN UNITS: METRIC | SCALE: 5:1

THIRD ANGLE PROJECTION

frame size: A4