REV	ECN No.	DATE	REMARK
A0	NEW	2015.05.10	NEW RELEASE

RoHS Compliant Pb

MATERIAL:
1.HOUSING: LCP, GLASS FIBER FILLED, BK
2.CONTACT: COPPER ALLOY (T=0.15mm)
3.GUARD PLATE:STAINLESS STEEL (T=0.10mm)
4.SHIELD: STAINLESS STEEL (T=0.20mm)
FINISH:
CONTACT: SEE ORDER INFORMATION
SHELL: BRIGHT NICKEL PLATING

PART NUMBER CODE:

CM073 – 24 L X XX R – 90
① ②

① HOUSING: B:BLACK

② CONTACTS PLATED:
01= 1u" gold plated on Contact area, Matte Tin plated on Soldertails, Nickel underplating over all

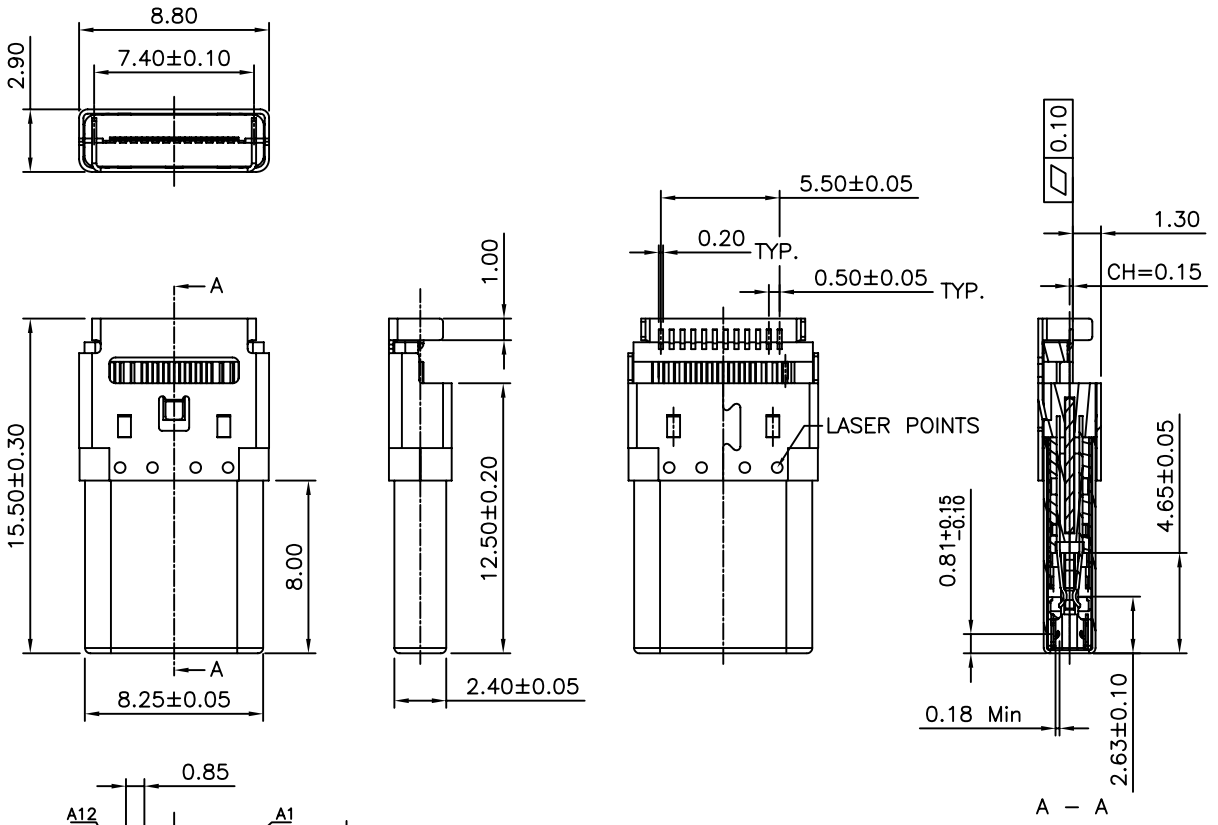

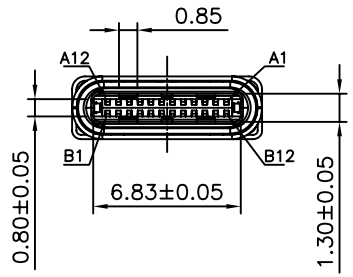

MATERIAL NO.:	THIS DRAWING CONTAINS INFORMATION THAT IS PROPRIETARY TO ZDT TECHNOLOGY. AND SHOULD NOT BE USED WITHOUT WRITTEN PERMISSION		
PART NUMBER CODE	深圳市中科兴达科技有限公司 SHENZHEN ZDT TECHNOLOGY CO., LTD	DRAWN BY SAM	DATE 2015.05.10
REVIEW TABLE FOR DETAILS	TITLE: U.S.B TYPE C PLUG SMT MIDDLE MOUNT RIGHT ANGLE	CHECKED BY JAY	DATE 2015.05.10
GENERAL TOLERANCES (UNLESS SPECIFIED)		APPROVED BY JACKY	DATE 2015.05.10
x.xxxx ± ---	DOCUMENT NO. CM073-24-90	SHEET NO. 1 OF 1	
x.xxx ± 0.10			
x.xx ± 0.25			
x.x ± 0.30			
ANGULAR ± --°	DIMENSION STYLE MM ONLY	DESIGN UNITS METRIC	SCALE 5:1
QUALITY SYMBOL			THIRD ANGLE PROJECTION

frame size: A4

REV	ECN No.	DATE	REMARK
A0	NEW	2015.05.10	NEW RELEASE

RoHS Compliant Pb

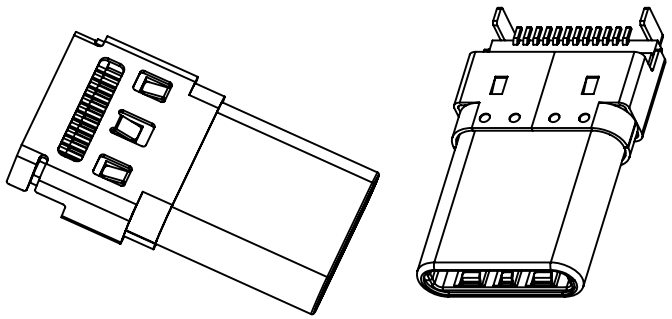

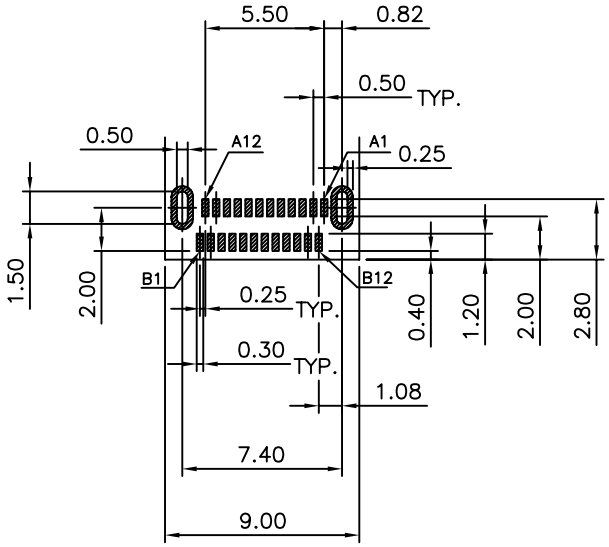

RECOMMENDED P.C.B. LAYOUT
T=0.80 OR 1.00mm

TOLERANCE UNSPECIFIED ±0.05mm

USB TYPE-C FULL-FEATURED RECEPTACLE INTERFACE PIN ASSIGNMENTS

PIN	Signal Name	Description	PIN	Signal Name	Description
A1	GND	Ground return	B12	GND	Ground return
A2	SSTXp1	Positive half of firs SuperSpeed TX differential pair	B11	SSRXp1	Positive half of firs SuperSpeed RX differential pair
A3	SSTXn1	Negative half of first SuperSpeed TX differential pair	B10	SSRXn1	Negative half of first SuperSpeed RX differential pair
A4	VBUS	Bus Power	B9	VBUS	Bus Power
A5	CC1	Configuration Channel	B8	SBU2	Sideband Use(SBU)
A6	Dp1	Positive half of the USB 2.0 differential pair-Position 1	B7	Dn2	Positive half of the USB 2.0 differential pair-Position 2
A7	Dn1	Negative half of the USB 2.0 differential pair-Position 1	B6	Dp2	Negative half of the USB 2.0 differential pair-Position 2
A8	SBU1	Sideband Use(SBU)	B5	CC2	Configuration Channel
A9	VBUS	Bus Power	B4	VBUS	Bus Power
A10	SSRXn2	Negative half of second SuperSpeed RX differential pair	B3	SSTXn2	Negative half of second SuperSpeed TX differential pair
A11	SSRXp2	Positive half of second SuperSpeed RX differential pair	B2	SSTXp2	Positive half of second SuperSpeed TX differential pair
A12	GND	Ground return	B1	GND	Ground return

MATERIAL NO.:

PART NUMBER CODE

REVIEW TABLE FOR DETAILS

QUALITY SYMBOL ▶= 0 ▽= 0

GENERAL TOLERANCES (UNLESS SPECIFIED)	
x.xxxx	± ---
x.xxx	± 0.10
x.xx	± 0.25
x.x	± 0.30
ANGULAR	± --°

THIS DRAWING CONTAINS INFORMATION THAT IS PROPRIETARY TO ZDT TECHNOLOGY. AND SHOULD NOT BE USED WITHOUT WRITTEN PERMISSION

ZDT 深圳市中科兴达科技有限公司 SHENZHEN ZDT TECHNOLOGY CO., LTD

TITLE: U.S.B TYPE C PLUG SMT MIDDLE MOUNT RIGHT ANGLE

DOCUMENT NO.: CM073-24-90

SHEET NO.: 1 OF 1

DIMENSION STYLE: MM ONLY

DESIGN UNITS: METRIC

SCALE: 5:1

	DATE
DRAWN BY: SAM	2015.05.10
CHECKED BY: JAY	2015.05.10
APPROVED BY: JACKY	2015.05.10

THIRD ANGLE PROJECTION

frame size: A4

REV	ECN No.	DATE	REMARK
A0	NEW	2015.05.10	NEW RELEASE

RoHS Compliant Pb

NOTE :
* Reel Material : HIPS
* Carrier Material : Clear, Conductive Polystyrene Alloy
* Cover Tape Material : Polyester
* Cover Tape Peel Strength : 0.1N ~ 1.3N
* Carrier camber is within 1mm in 250mm
* All dimensions meet EIA-481-B requirements.
* Quantity : 1000 PCS/Reel

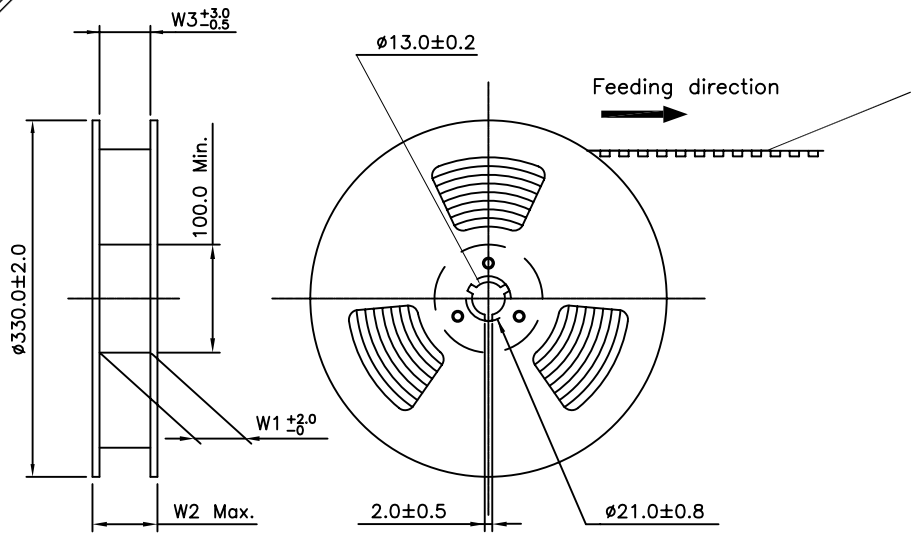

Dimension				Packing (Reel/Carton)
E	W1	W2	W3	
32.0	32.5	36.5	32.5	9

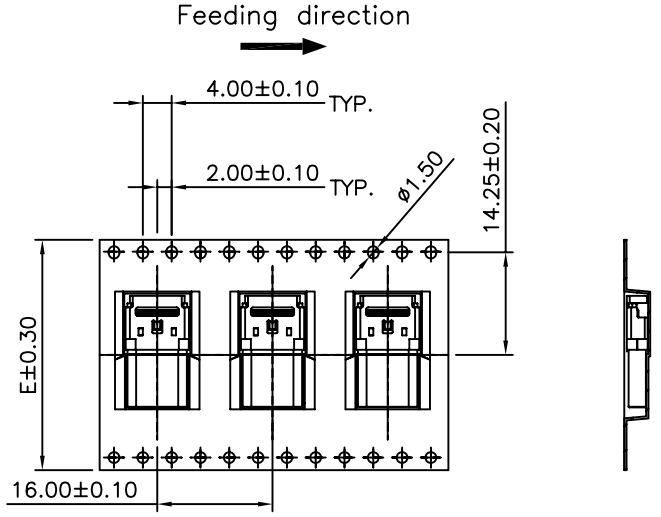

WIDTH : 32 mm Carrier

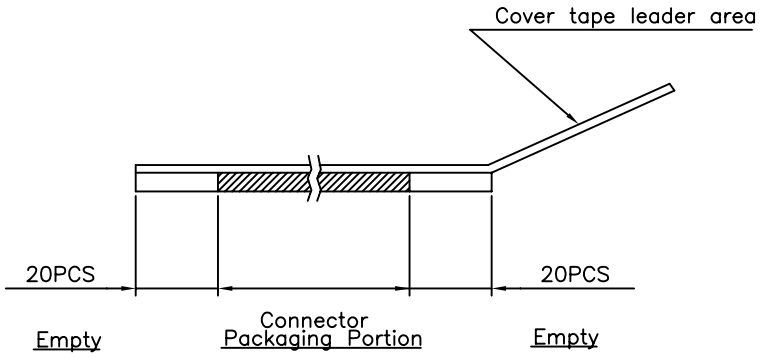

MATERIAL NO.:
PART NUMBER CODE
REVIEW TABLE FOR DETAILS

QUALITY SYMBOL

GENERAL TOLERANCES (UNLESS SPECIFIED)	
X.XXXX	± ---
X.XXX	± 0.10
X.XX	± 0.25
X.X	± 0.30
ANGULAR	± --°

THIS DRAWING CONTAINS INFORMATION THAT IS PROPRIETARY TO ZDT TECHNOLOGY. AND SHOULD NOT BE USED WITHOUT WRITTEN PERMISSION

深圳市中科兴达科技有限公司
SHENZHEN ZDT TECHNOLOGY CO., LTD

TITLE: U.S.B TYPE C PLUG SMT MIDDLE MOUNT RIGHT ANGLE

DOCUMENT NO.: CM073-24-90
SHEET NO.: 1 OF 1

	NAME	DATE
DRAWN BY	SAM	2015.05.10
CHECKED BY	JAY	2015.05.10
APPROVED BY	JACKY	2015.05.10

DIMENSION STYLE: MM ONLY
DESIGN UNITS: METRIC
SCALE: 5:1
THIRD ANGLE PROJECTION

frame size: A4