RoHS Compliant Pb

THIS DRAWING CONTAINS INFORMATION THAT IS PROPRIETARY TO ZDT TECHNOLOGY. AND SHOULD NOT BE USED WITHOUT WRITTEN PERMISSION

REV	ECN No.	DATE	REMARK
A	NEW	2020.07.07	NEW RELEASE

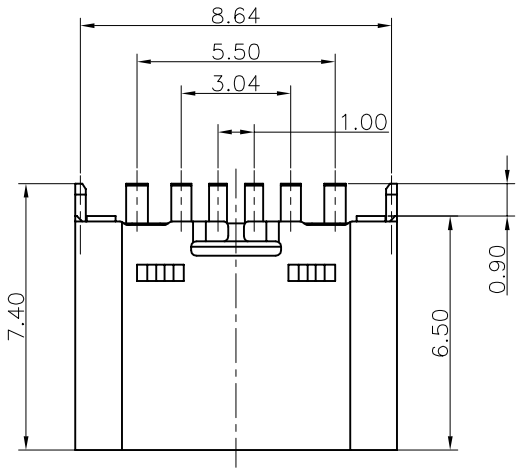

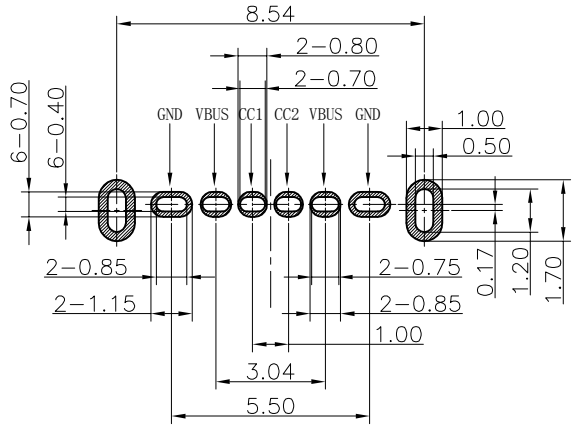

RECOMMEND P.C.B LAYOUT

TOLERANCE UNSPECIFIED ±0.05mm

NOTES:

SPECIFICATION:

1.CURRENT RATING: 3.0A MAX
2.VOLTAGE: 100 VAC
3.TEMPERATURE RANGE: -30°C~+85°C
4.CONTACT RESISTANCE: 40 MILLIONHM MAX
5.INSULATION RESISTANCE: 100 MEGOHMS MIN
6.LNSERTION FORCE: 5N~20N
7.UNMATING FORCE: 8N-20N
8.DURABILITY: 10000 CYCLES
9. PART NUMBER CODE:(产品料号)

CF256-06 X X XX XX-02
(1) (2)(3) (4)

(1) HOUSING MATERIAL:
L:LCP

(2) HOUSING COLOR:
B:BLACK

(3) CONTACTS PLATED:
11:接触镀金1u"其它GF

(4) PACKING OPTIONS
R:TAPE & REEL(常用料)
VR:卷装+真空包装(专用客户指定包规)

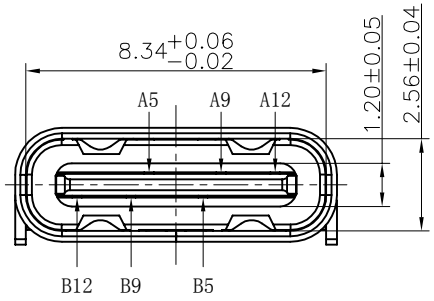

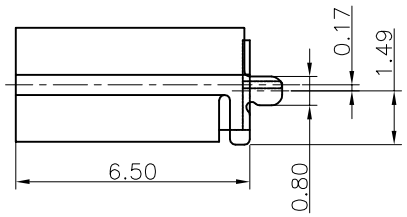

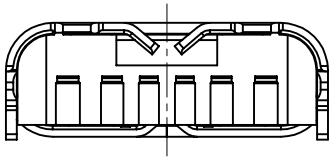

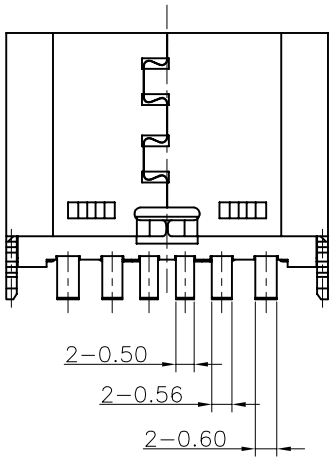

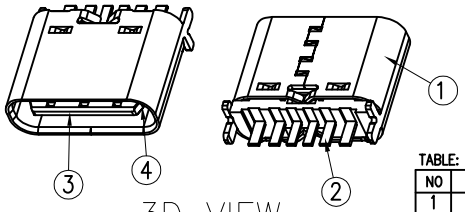

3D VIEW

USB TYPE C PIN ASSIGNMENTS

PIN NUMBER	SIGNAL NAME	PIN NUMBER	SIGNAL NAME
A5	CC1	B12	GND
A9	VBUS	B9	VBUS
A12	GND	B5	CC2

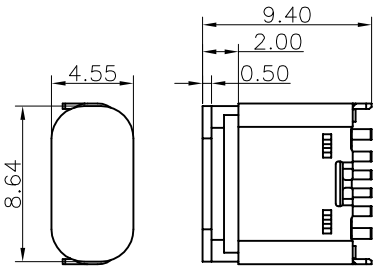

加塞子示意图

SCALE 2:1

TABLE:

NO	PART	Q'TY	Material
1	SHELL	1	STAINLESS STEEL,NI PLATED
2	CONTACT	6	COPPER STEEL,TIN/Au/NI PLATED
3	HOUSING	1	HIGH TEMPERATURE RESISTANT PLASTIC BLACK UL94 V-0
4	Latch	2	STAINLESS STEEL

PART NO.:
SEE THE PART NUMBER CODE

ZDT 深圳市中科兴达科技有限公司
SHENZHEN ZDT TECHNOLOGY CO., LTD

GENERAL TOLERANCES (UNLESS SPECIFIED)	
x.xxxx	± ---
x.xxx	± 0.10
x.xx	± 0.20
x.x	± 0.30
ANGULAR	± --°

QUALITY SYMBOL

TITLE: TYPE CF 6P单排直立式DIP H=6.5(T0.3)

DWG.NO. CF256-06-02

SHEET NO. 1 OF 1

DIMENSION STYLE: MM ONLY

DESIGN UNITS: METRIC

SCALE: 1:1

	DATE
DRAWN BY SAM	2020.07.07
CHECKED BY JAY	2020.07.07
APPROVED BY JACKY	2020.07.07

THIRD ANGLE PROJECTION

frame size: A4