RoHS Compliant Pb

THIS DRAWING CONTAINS INFORMATION THAT IS PROPRIETARY TO ZDT TECHNOLOGY. AND SHOULD NOT BE USED WITHOUT WRITTEN PERMISSION

REV	ECN No.	DATE	REMARK
A	NEW	2020.12.15	NEW RELEASE

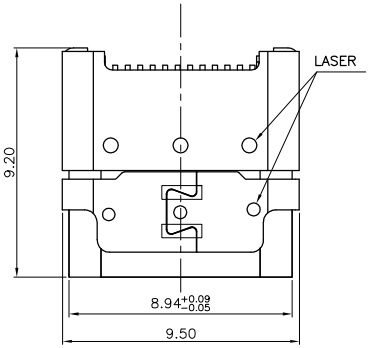

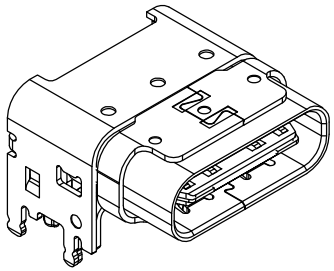

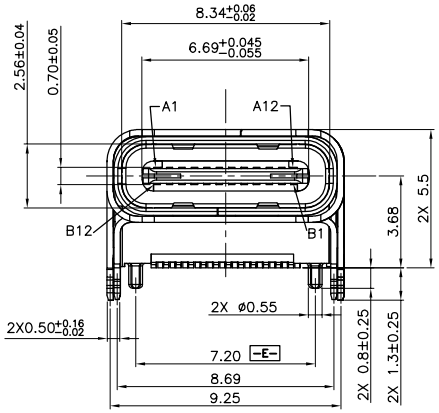

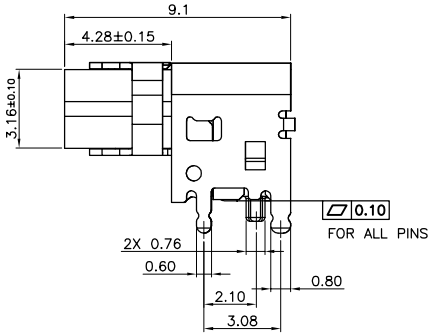

NOTE:
1.MATERIAL:
SEE TABLE 1
2.ELECTRICAL CHARACTERISTICS;
2.1 CONTACT RESISTANCE:
40mΩ Max FOR VBUS ,GNA AND OTHER CONTACTS
50mΩ CHANGE AFTER ENVIRONMENT TEST
2.2 CONTACT CURRENT RATING:
COLLECTIVELY VBUS PIN (A4,A9,B4,B9) ,TOTAL 5A
VCCON PIN (B5) THROUGH GND PIN(A1,A12,B1,B12),1.25A
OTHERS PIN, 0.25A
2.3 DIELECTRIC WITHSTANDING VOLTAGE: 100V AC (R.M.S).
2.4 INSULATION RESISTANCE 100MΩ Min.
3. MECHANICAL CHARACTERISTICS:
3.1 MATING FORCE: 5~20 N.
3.2 UNMATED FORCE: INITIAL 8~20N; 6~20N AFTER 10000 CYCLES
3.3 OPERATING TEMPERATURE: −40°C ~ 120°C
3.4 DURABILITY: 10,000 CYCLES
4.DIMENSIONS ARE IN MILLIMETERS
5.RECOMMENED PROCESS:IR REFLOW 260℃,5 ~ 10 SECONDS.
6.THE CONNECTOR IS ROHS/HALOGEN COMPLIANT.
7. THE PACKAGE IS TAPE & REEL
8. THE PART CONFORMS TO USB TYPE C SPEC UNLESS SPECIFIED

9 .PART NUMBER CODE:(产品料号)

CF291-24 X X XX R - F5
(1)(2)(3)(4)

(1) HOUSING MATERIAL:
L:LCP

(2) HOUSING COLOR:
B:BLACK

(3) CONTACTS PLATED:
15:接触镀金30u"其它GF

(4) PACKING OPTIONS
R:TAPE & REEL

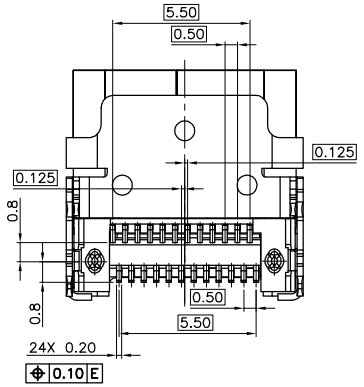

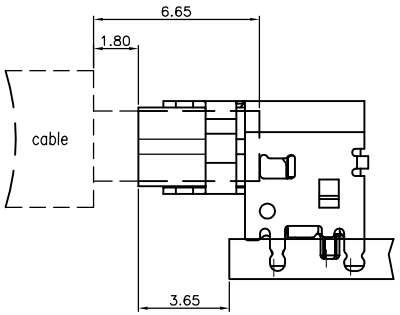

NO.	VARIETY	MATERIAL	QT,Y	REMARK
08	COVER	LCP	1	Black, UL94 V-0
07	UNDER SHELL	SUS304	1	T=0.25,Solder area Plating Au 1U"
06	OUTER SHELL	SUS304	1	T=0.25,Solder area Plating Au 1U"
05	INNER SHELL	SUS304	1	T=0.30,Plating nickel
04	MOLDING	LCP	1	Black, UL94 V-0
03	SHIELDING PLATE	SUS301	1	T=0.15 ,Plating nickel
02	BOTTOM CONTACT	Copper alloy	12	T=0.12 ,Au 30u", Plated at contact area,G/F MIN plated at solder area.
01	TOP CONTACT	Copper alloy	12	T=0.12 Au 30u", Platedat at contact area,G/F MIN plated at solder area.

PART NO.:
SEE THE PART NUMBER CODE

GENERAL TOLERANCES (UNLESS SPECIFIED)

X.XXXX	± ---
X.XXX	± 0.10
X.XX	± 0.20
X.X	± 0.30
ANGULAR	± --°

QUALITY SYMBOL: ≤ 0 ≥ 0

深圳市中科兴达科技有限公司
SHENZHEN ZDT TECHNOLOGY CO. , LTD

TITLE: USB TYPE C Female 24P Mounting Top Dual smt , H=9.1mm,CL=3.68mm

DWG.NO.: CF291-24-F5

SHEET NO.: 1 OF 2

DIMENSION STYLE: MM ONLY

DESIGN UNITS: METRIC

SCALE: 1:1

DRAWN BY	DATE
SAM	2020.12.15
CHECKED BY	DATE
JAY	2020.12.15
APPROVED BY	DATE
JACKY	2020.12.15

THIRD ANGLE PROJECTION

frame size: A4

RoHS Compliant

THIS DRAWING CONTAINS INFORMATION THAT IS PROPRIETARY TO ZDT TECHNOLOGY. AND SHOULD NOT BE USED WITHOUT WRITTEN PERMISSION

REV	ECN No.	DATE	REMARK
A	NEW	2020.12.15	NEW RELEASE

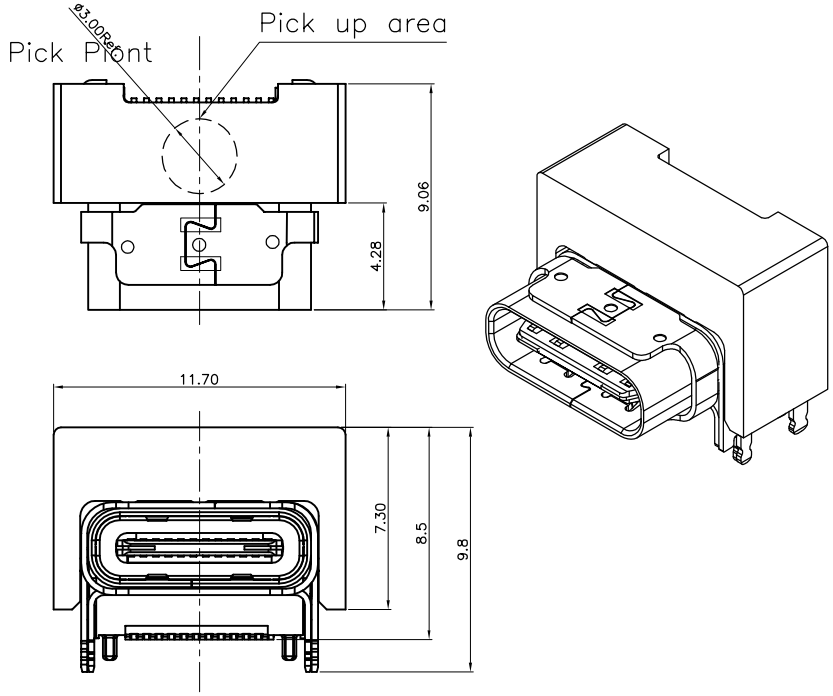

With COVER VIEW
Scale 1:2

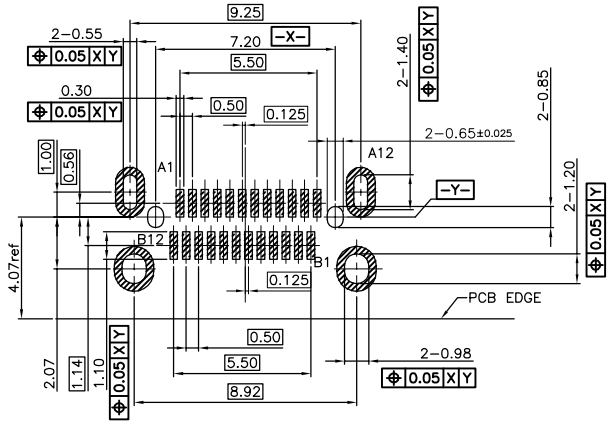

RECOMMENDED PCB LAYOUT

PCB THICKNESS :1.20±0.05
DEFAULT TOLERANCE:±0.05

TYPE C INTERFACE(FRONT VIEW)

A1	A2	A3	A4	A5	A6	A7	A8	A9	A10	A11	A12
GND	TX1+	TX1-	Vbus	CC1	D+	D-	SBU1	Vbus	RX2-	RX2+	GND

GND	RX1+	RX1-	Vbus	SBU2	D-	D+	CC2	Vbus	TX2-	TX2+	GND
B12	B11	B10	B9	B8	B7	B6	B5	B4	B3	B2	B1

PART NO.:
SEE THE PART NUMBER CODE

深圳市中科兴达科技有限公司
SHENZHEN ZDT TECHNOLOGY CO., LTD

QUALITY SYMBOL	GENERAL TOLERANCES (UNLESS SPECIFIED)	
	X.XXXX	± ---
	X.XXX	± 0.10
	X.XX	± 0.20
	X.X	± 0.30
	ANGULAR	± --°

TITLE
USB TYPE C Female 24P Mounting Top
Dual smt , H=9.1mm,CL=3.68mm

DWG.NO. CF291-24-F5

SHEET NO. 2 OF 2

DIMENSION STYLE: MM ONLY

DESIGN UNITS: METRIC

SCALE: 1:1

	DATE
DRAWN BY SAM	2020.12.15
CHECKED BY JAY	2020.12.15
APPROVED BY JACKY	2020.12.15

THIRD ANGLE PROJECTION

frame size: A4