RoHS Compliant

THIS DRAWING CONTAINS INFORMATION THAT IS PROPRIETARY TO ZDT TECHNOLOGY. AND SHOULD NOT BE USED WITHOUT WRITTEN PERMISSION

REV	ECN No.	DATE	REMARK
A	NEW	2020.10.25	NEW RELEASE

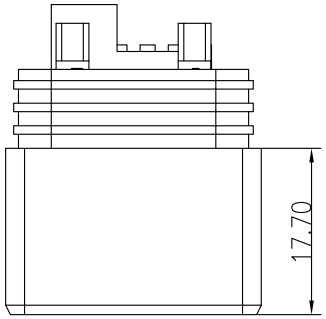

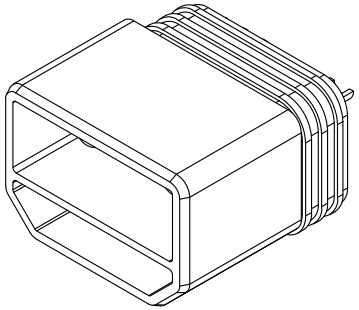

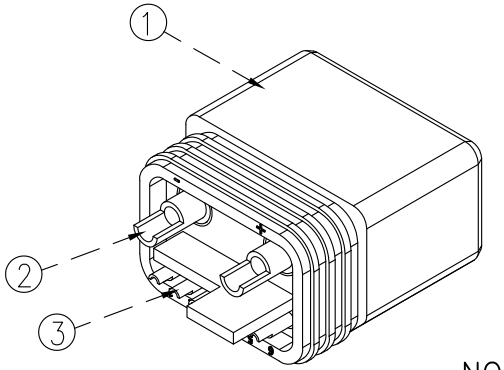

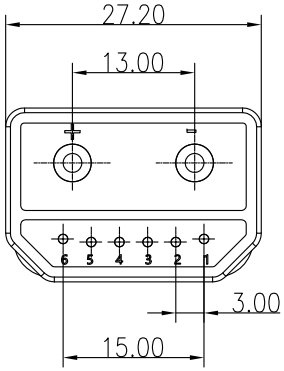

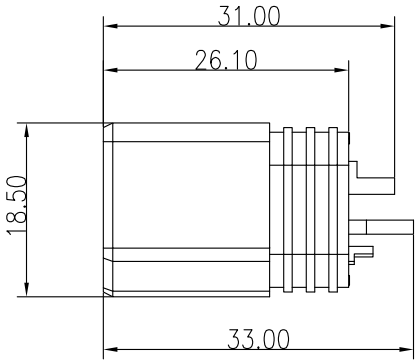

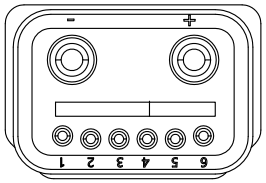

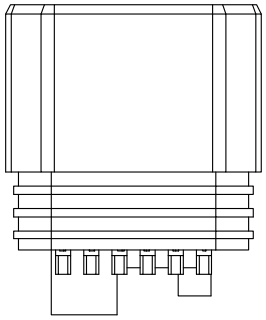

NOTES:

1. MATERIAL: SEE "TABLE 1";
2. FINISH: SEE "TABLE 1";
3. ELECTRICAL:
   - 3.1. VOLTAGE RATING: 48V DC
   - 3.2. CURRENT RATING: 50A
   - 3.3. CONTACT RESISTANCE: 50mΩ Max.
   - 3.4. INSULATION RESISTANCE: 500 MΩ Min.
   - 3.5. WITHSTAND VOLTAGE: 500 VAC Min.
4. MECHANICAL:
   - 4.1. OPERATING LIFE: 5000 CYCLES MIN.;

TABLE 1:

NO.	PART NAME	QTY	MATERIAL	DESCRIPTION
③	The signal PIN	6	Copper Alloy	Ni 50u"Min
②	Power supply PIN	2	Copper Alloy	
①	Housing	1	HIGH TEMP	BLACK

PART NO.: PWM001-B11T-J6

QUALITY SYMBOL

GENERAL TOLERANCES (UNLESS SPECIFIED)	
x.xxxx	± ---
x.xxx	± 0.15
x.xx	± 0.25
x.x	± 0.30
ANGULAR	± --°

深圳市中科兴达科技有限公司
SHENZHEN ZDT TECHNOLOGY CO., LTD

TITLE: 6+2新能源电车连接器公座

DWG.NO.: PWM001-J6

SHEET NO.: 1 OF 1

DIMENSION STYLE: MM ONLY

DESIGN UNITS: METRIC

SCALE: 1:1

DRAWN BY	SAM	DATE 2020.10.25
CHECKED BY	JAY	DATE 2020.10.25
APPROVED BY	JACKY	DATE 2020.10.25

THIRD ANGLE PROJECTION

frame size: A4