RoHS Compliant Pb

THIS DRAWING CONTAINS INFORMATION THAT IS PROPRIETARY TO ZDT TECHNOLOGY. AND SHOULD NOT BE USED WITHOUT WRITTEN PERMISSION

REV	ECN No.	DATE	REMARK
A	NEW	2022.04.05	NEW RELEASE
B	---	2023.03.21	依客户要求增加公差

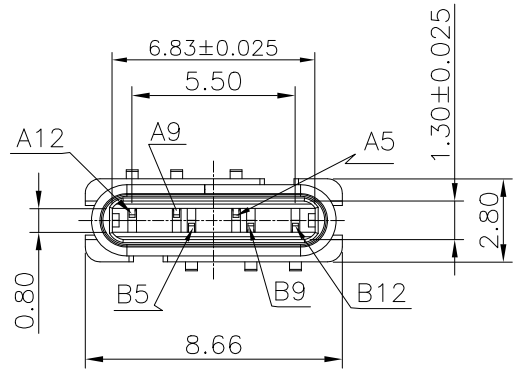

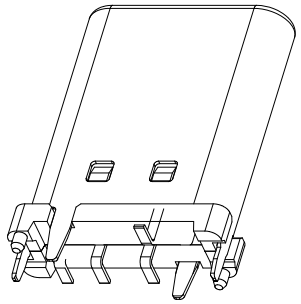

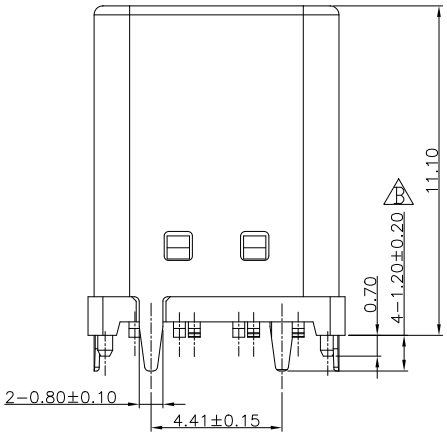

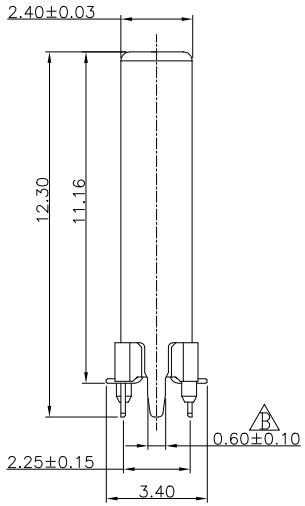

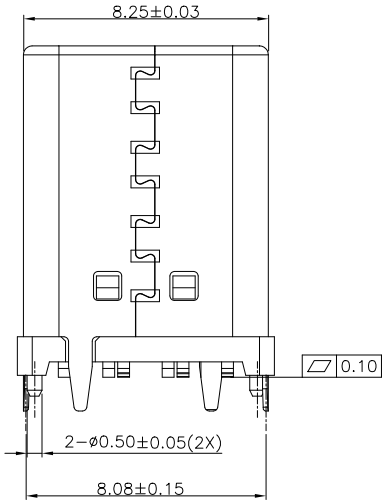

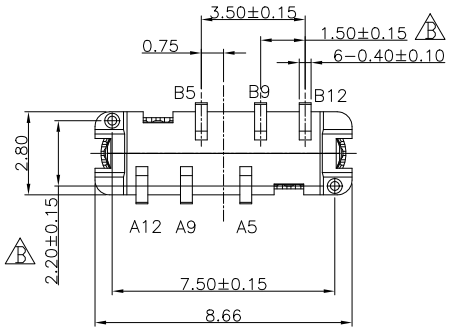

NOTE:
1.MATERIAL SPECIFICATION:
1.HOUSING&PICKUP COVER:LCP,UL94 V-0.
2.CONTACTS: COPPER ALLOY(C7025)
3.FRONT SHELL: STAINLESS STEEL(SUS304)
2.PLATING SPECIFICATION:
2-1.CONTACTS:
Ni 50u" MIN. UNDER PLATED OVER ALL.
Au PLATED ON THE FUNCTIONAL AREA OF CONTACT.
(GOLD PLATING THICKNESS FOLLOW THE P/N)
PLATING SPECIFICATIONS OF THE SOLDER AREA FOLLOW THE P/N
2-2.FRONT SHELL:
Ni 30u" MIN. UNDER PLATED OVER ALL.
3.MECHANICAL PERFORMANCE,
3-1.INSERTION FORCE: 0.5~2.0kgf.
3-2.REMOVAL FORCE: 0.8kgf~2.0kgf.
3-3.DURABILITY: 10000 CYCLES.
4.ELECTRICAL PERFORMANCE,
4-1. CURRENT RATING:3.0A
VOLTAGE RATING:5.0V
4-2. LLCR:
VBUS & GND PINS AND OTHER PINS: 40mΩ/PIN MAX.
SHIELD: 50mΩ/MAX.
LLCR MAX. CHANGE OF ALL PINS: 10mΩ.
4-3.INSULATION RESISTANCE: 100MΩ MIN
4-4.DIELECTRIC WITHSTAND VOLTAGE,AC 100V FOR 1 MINUTE.
5. ENVIRONMENTAL PERFORMANCE:
OPERATING TEMPERATURE: -25°C~+85°C.
6.IR REFLOW:
THE PEAK TEMPERATURE ON THE BOARD SHALL BE MAINTAINED FOR 10 SECONDS AT 260°C.
7.符合ROHS要求.
8.PART NUMBER CODE:

CM106 - 001 S L B XX X - 02
(1) (2) (3) (4)

(1) HOUSING MATERIAL:
L:LCP
(2) HOUSING COLOR:
B:BLACK
(3) CONTACTS PLATED:
02:FUNCTIONAL AREA 3u'',SOLDER AREA Sn 80u"
(4) PACKING OPTIONS
R:TAPE & REEL
VR:卷装+真空包装

A5	CC1	B12	GND
A9	VBUS	B9	VBUS
A12	GND	B5	CC2
PIN	SIGNAL NAME	PIN	SIGNAL NAME

PART NO.:
SEE THE PART NUMBER CODE

QUALITY SYMBOL

GENERAL TOLERANCES (UNLESS SPECIFIED)	
x.xxxx	± ---
x.xxx	± 0.10
x.xx	± 0.25
x.x	± 0.30
ANGULAR	± --°

深圳市中科兴达科技有限公司
SHENZHEN ZDT TECHNOLOGY CO., LTD

TITLE
USB CM 6PIN VERTICAL TYPE HIGHT=11.1 SMT

DWG.NO. CM106-001-02
SHEET NO. 1 OF 2
DIMENSION STYLE MM ONLY
DESIGN UNITS METRIC
SCALE 1:1

	DATE
DRAWN BY SAM	2023.03.21
CHECKED BY JAY	2023.03.21
APPROVED BY JACKY	2023.03.21

THIRD ANGLE PROJECTION

frame size: A4

RoHS Compliant

THIS DRAWING CONTAINS INFORMATION THAT IS PROPRIETARY TO ZDT TECHNOLOGY. AND SHOULD NOT BE USED WITHOUT WRITTEN PERMISSION

REV	ECN No.	DATE	REMARK
A	NEW	2022.04.05	NEW RELEASE
B	---	2023.03.21	依客户要求增加公差

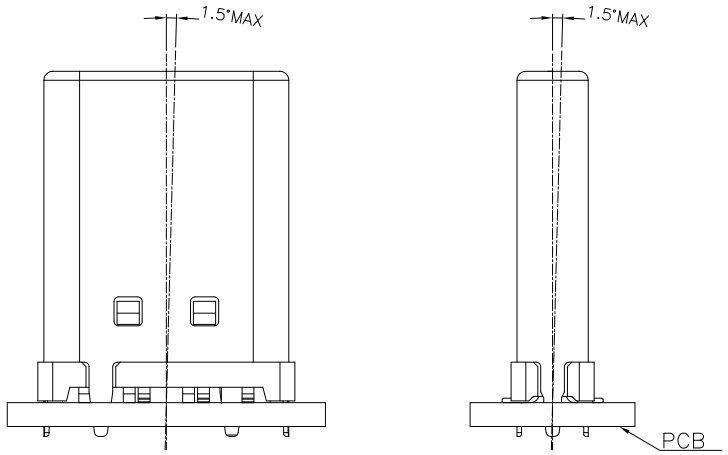

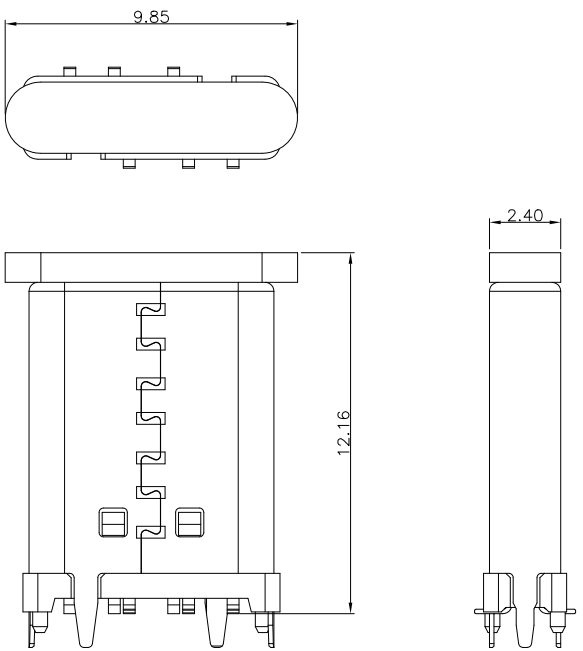

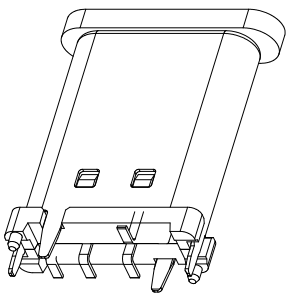

AFTER WITH PICKUP COVER

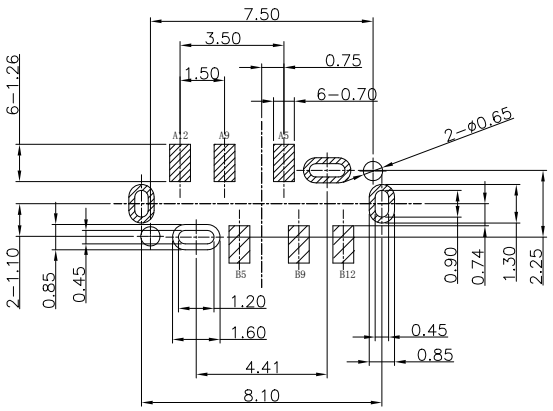

RECOMMENDED PCB LAYOUT(t=0.80±0.05)
COMPONENT SIDE(GENERAL TOLERANCE:±0.05)

PART NO.: SEE THE PART NUMBER CODE		深圳市中科兴达科技有限公司 SHENZHEN ZDT TECHNOLOGY CO., LTD	DRAWN BY SAM / DATE 2023.03.21
QUALITY SYMBOL	GENERAL TOLERANCES (UNLESS SPECIFIED)	TITLE: USB CM 6PIN VERTICAL TYPE HIGHT=11.1 SMT	CHECKED BY JAY / DATE 2023.03.21
	x.xxxx ± ---		
	x.xxx ± 0.10	DWG.NO. CM106-001-02 / SHEET NO. 2 OF 2	APPROVED BY JACKY / DATE 2023.03.21
	x.xx ± 0.25		
	x.x ± 0.30	DIMENSION STYLE MM ONLY / DESIGN UNITS METRIC / SCALE 1:1	THIRD ANGLE PROJECTION
	ANGULAR ± --°		

frame size: A4