RoHS Compliant Pb

THIS DRAWING CONTAINS INFORMATION THAT IS PROPRIETARY TO ZDT TECHNOLOGY. AND SHOULD NOT BE USED WITHOUT WRITTEN PERMISSION

REV	ECN No.	DATE	REMARK
A	NEW	2022.02.14	NEW RELEASE

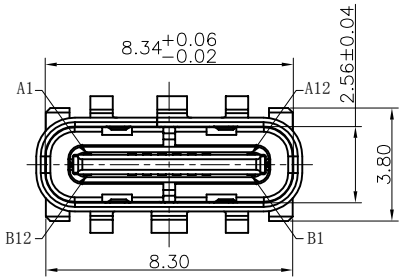

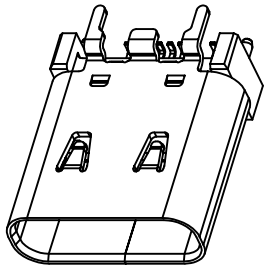

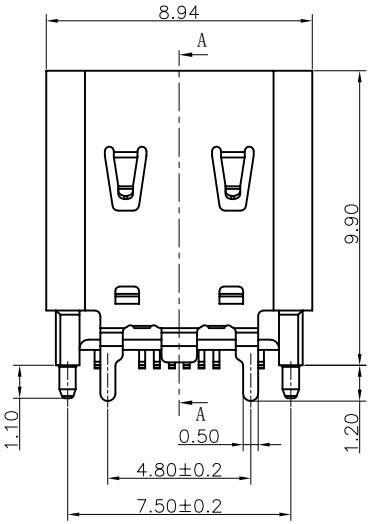

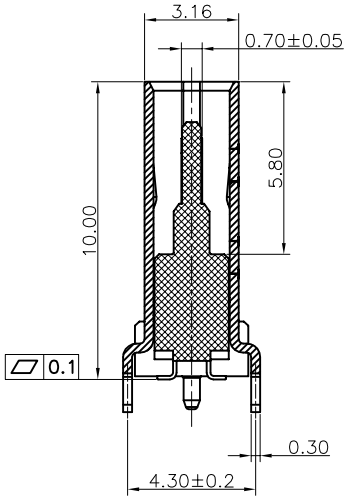

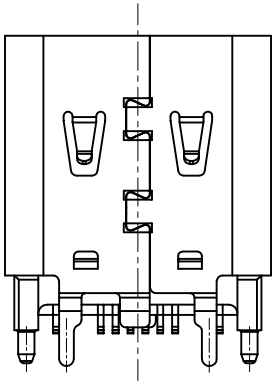

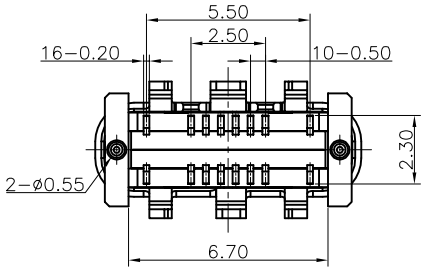

NOTE:
1.MATERIAL SPECIFICATION:
1−1.HOUSING:HIGH TEMPERATURE RESISTANT PLASTIC,UL94 V−0.
1−2.TERMINAL: COPPER ALLOY
1−3.MID PLATE: STAINLESS STEEL(SUS301 T=0.15mm)
1−4.FRONT SHELL: STAINLESS STEEL(SUS304 T=0.3mm)
2.PLATING SPECIFICATION:
2−1.TERMINAL:
Ni 50u" MIN. UNDER PLATED OVER ALL.
Au PLATED ON THE FUNCTIONAL AREA OF CONTACT.
(GOLD PLATING THICKNESS FOLLOW THE P/N)
PLATING SPECIFICATIONS OF THE SOLDER AREA FOLLOW THE P/N
2−2.FRONT SHELL:
Ni 30u" MIN. UNDER PLATED OVER ALL.
2−3.MID PLATE
CLEAR ONLY
2−4.EMI PLATE:
CLEAR ONLY
3.MECHANICAL PERFORMANCE,
3−1.INSERTION FORCE: 0.5~2.0kgf.
3−2.REMOVAL FORCE: 0.8kgf~2.0kgf.
3−3.DURABILITY: 10000 CYCLES.
4.ELECTRICAL PERFORMANCE,
4−1. VOLTAGE RATING:5 V DC/AC (RMS. max)
CURRENT RATING:5 AMPS. FOR TOTAL VBUS/GND PINS;
1.25AMPS FOR CC PIN,0.25 AMPS. FOR ALL OTHER CONTACT.
4−2. LLCR:.
VBUS & GND PINS AND OTHER PINS: 40mΩ/PIN MAX.
SHIELD: 50mΩ/MAX.
LLCR MAX. CHANGE OF ALL PINS: 10mΩ.
4−3.INSULATION RESISTANCE: 100MΩ MIN
4−4.DIELECTRIC WITHSTAND VOLTAGE,AC 100V FOR 1 MINUTE.
5. ENVIRONMENTAL PERFORMANCE:
OPERATING TEMPERATURE: −25°C~+85°C.
6.IR REFLOW:
THE PEAK TEMPERATURE ON THE BOARD SHALL BE MAINTAINED FOR 10 SECONDS AT 260°C.

7.PART NUMBER CODE:(产品料号)

CF 1 16 − 012 S X X XX R − 02
(1)(2) (3)(4)(5)(6)

(1) 产品型态:
1:180度直立式

(2) Pin No.:
16:16PIN

(3) HOUSING MATERIAL:
L:LCP

(4) HOUSING COLOR:
B:BLACK

(5) CONTACTS PLATED:
02:接触镀金3u"焊接区雾锡
12:接触镀金3u"其它GF

(6) PACKING OPTIONS
R:TAPE & REEL

PART NO.:
SEE THE PART NUMBER CODE

QUALITY SYMBOL	GENERAL TOLERANCES (UNLESS SPECIFIED)	
	x.xxxx	± ---
	x.xxx	± 0.10
	x.xx	± 0.20
	x.x	± 0.30
	ANGULAR	± --°

ZDT 深圳市中科兴达科技有限公司
SHENZHEN ZDT TECHNOLOGY CO.,LTD

TITLE: TYPE C母座16P直立式SMT H=10.0

DWG.NO.: CF116-012-02

SHEET NO.: 1 OF 2

DIMENSION STYLE: MM ONLY

DESIGN UNITS: METRIC

SCALE: 1:1

		DATE
DRAWN BY	SAM	2022.02.14
CHECKED BY	JAY	2022.02.14
APPROVED BY	JACKY	2022.02.14

THIRD ANGLE PROJECTION

frame size: A4

RoHS Compliant

THIS DRAWING CONTAINS INFORMATION THAT IS PROPRIETARY TO ZDT TECHNOLOGY. AND SHOULD NOT BE USED WITHOUT WRITTEN PERMISSION

REV	ECN No.	DATE	REMARK
A	NEW	2015.05.10	NEW RELEASE

WITH PICK UP COVER

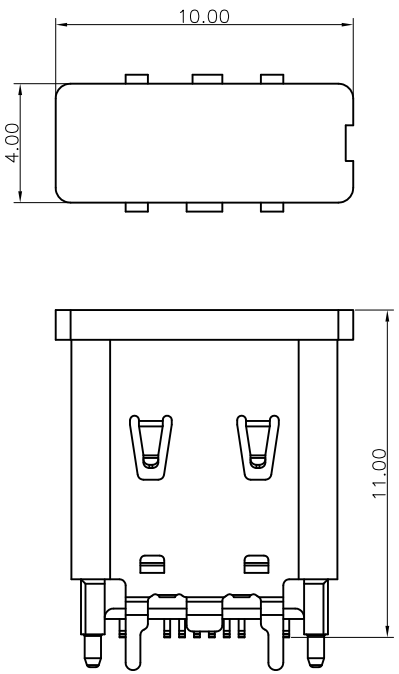

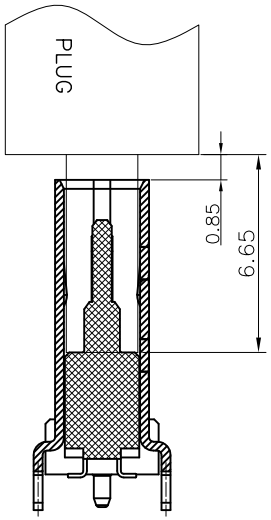

AFTER MATING

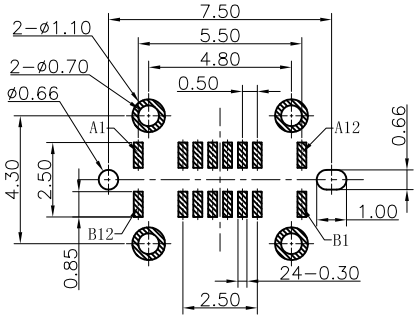

RECOMMEND P.C.B LAYOUT(COMPONENT SIDE)

TOLERANCE FOR PCB LAYOUT IS ±0.05

USB TYPE C PIN ASSIGNMENTS

PIN NUMBER	SIGNAL NAME	PIN NUMBER	SIGNAL NAME
A1	GND	B12	GND
A4	VBUS	B9	VBUS
A5	CC1	B8	SBU2
A6	DP1	B7	DN2
A7	DN1	B6	DP2
A8	SBU1	B5	CC2
A9	VBUS	B4	VBUS
A12	GND	B1	GND

PART NO.:
SEE THE PART NUMBER CODE

深圳市中科兴达科技有限公司
SHENZHEN ZDT TECHNOLOGY CO., LTD

GENERAL TOLERANCES (UNLESS SPECIFIED)	
x.xxxx	± ---
x.xxx	± 0.10
x.xx	± 0.20
x.x	± 0.30
ANGULAR	± --°

QUALITY SYMBOL: ≥ 0, ≤ 0, = 0

TITLE: TYPE C母座16P直立式SMT H=10.0

DWG.NO.: CF116-012-02

SHEET NO.: 2 OF 2

DIMENSION STYLE: MM ONLY

DESIGN UNITS: METRIC

SCALE: 1:1

DRAWN BY	SAM	DATE 2015.05.10
CHECKED BY	JAY	DATE 2015.05.10
APPROVED BY	JACKY	DATE 2015.05.10

THIRD ANGLE PROJECTION

frame size: A4